ADVANCED PHYSICS CLUB

MARCH 17, 2019

Today's meeting

Today we briefly reviewed definitions of current and voltage. We also talked about Ohm's law and its applications. Some of the material covered can be found here:

`https://en.wikipedia.org/wiki/Ohm's_law`

`http://hyperphysics.phy-astr.gsu.edu/hbase/electric/ohmlaw.html`

We have started solving electrical circuit problems. We derived equivalent resistances for parallel and series electrical circuits from "first principles" `https://en.wikipedia.org/wiki/Series_and_parallel_circuits` and talked about Kirchhoff's laws `https://en.wikipedia.org/wiki/Kirchhoff's_circuit_laws`.

Electrical circuits

These are some examples of the problems we considered in class.

1. The resistor circuit shown in the Figure is called the bridge resistor circuit. It is neither parallel, not series connection of resistors. Finding its equivalent resistance in general is more complicated than for a combination of parallel and series connections. Try to do it for particular values of resistances $R_3 = 200\Omega$, $R_1 = R_2 = R_4 = R_5 = 100\Omega$. what is the current running through battery for $E_1 = 24V$?

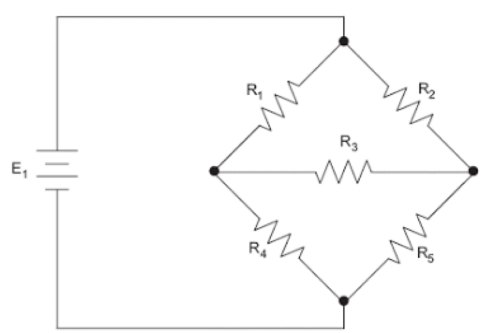

Figure 1.

2. Find the resistance between terminals.

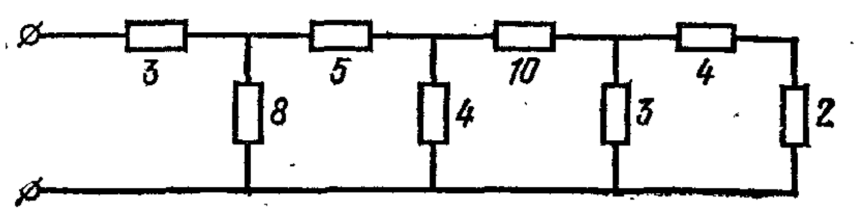

Figure 2.

3. What is the resistance of the piece of square 2×2 grid of conductors between diagonal points with coordinates (0,0) and (2,2) if the resistance of each wire connecting nearest neighbor points of the grid is r?

Homework

1. a) Find a resistance between two points of the diagonal of the cube (points have coordinates (0,0,0) and (1,1,1)) if the cube is made out of the resistors with resistances r each. b) What is the resistance of the same cube between points (0,0,0) and (1,0,0)?

2. What should be the ratio R_2/R_1 in the following circuit so that the ratio of voltages across two consequent vertical resistors is 10?

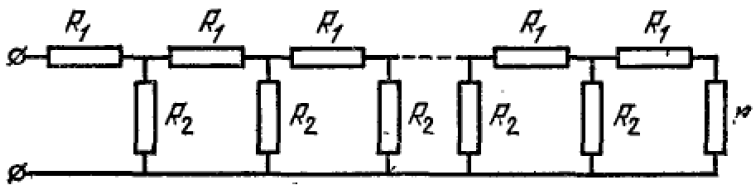

Figure 3.

For the next meeting

There will be NO club on March 24. The next club's meeting is at 2:40pm, room P-123, on Sunday, **March 31**. Important: from March 31 and on the club will meet in the room **P123** (Plaza level of Physics building). We plan to continue solving electricity and magnetism problems.